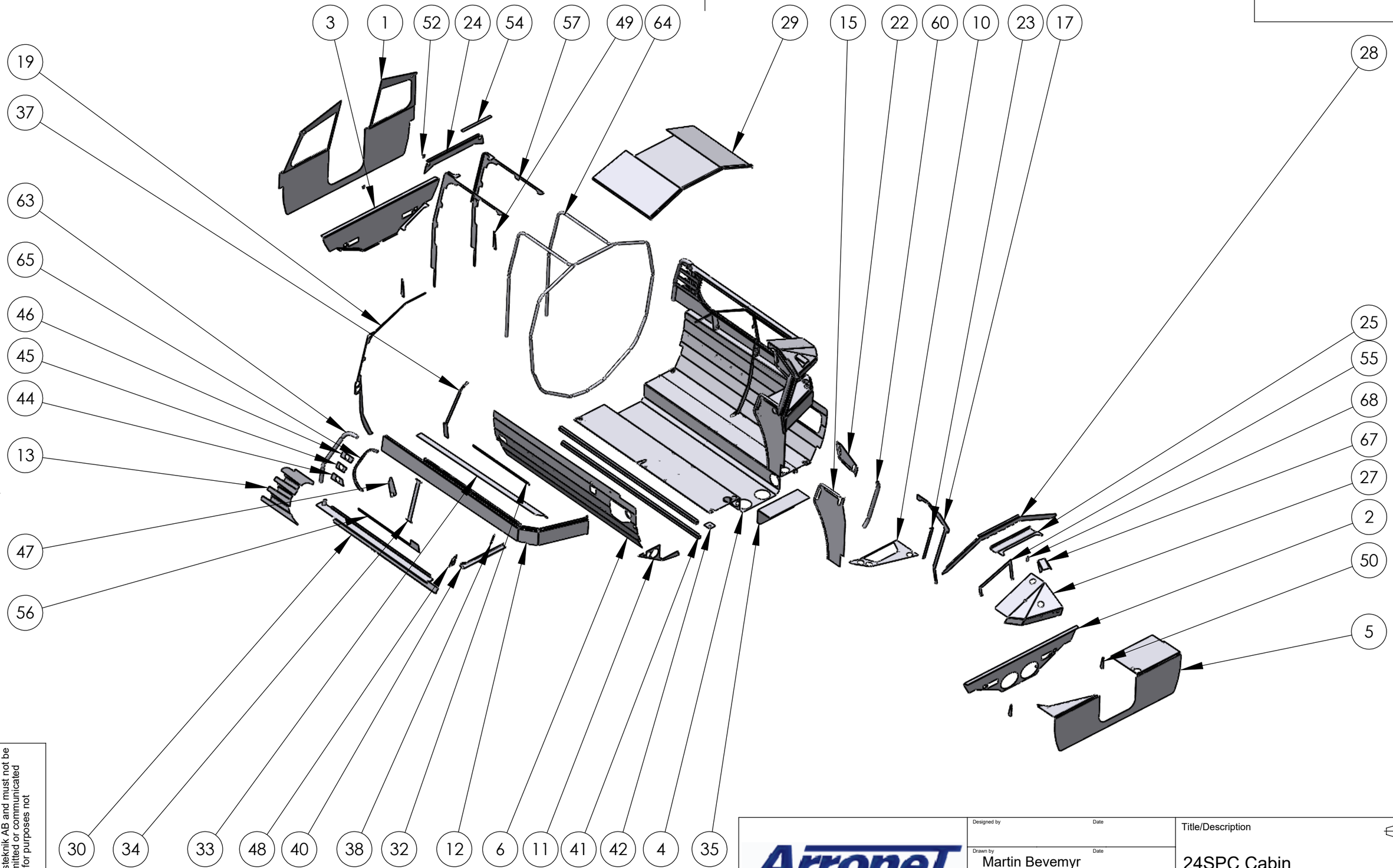

This document and its contents are the exclusive property of Arronet Smidesteknik AB and must not be copied, reproduced, transmitted or communicated to any other party or used for purposes not expressly permitted by us.

Arronet
Arronet Teknik AB
Varvsvägen 2
742 43 Öregrund
Telefon 0173-465 90
info@arronet.se

Designed by	Date		Title/Description
Drawn by: Martin Bevemyr	Date		24SPC Cabin
Approved by	Date		
Weight: Kg	Material	Thickness: t=	
Status		Tolerance	Drawing no / Rev
Scale: 1:40	Format: A3	Sheet/Sheet: 1/2	Rev Part

SOLIDWORKS Educational Product. For Instructional Use Only.

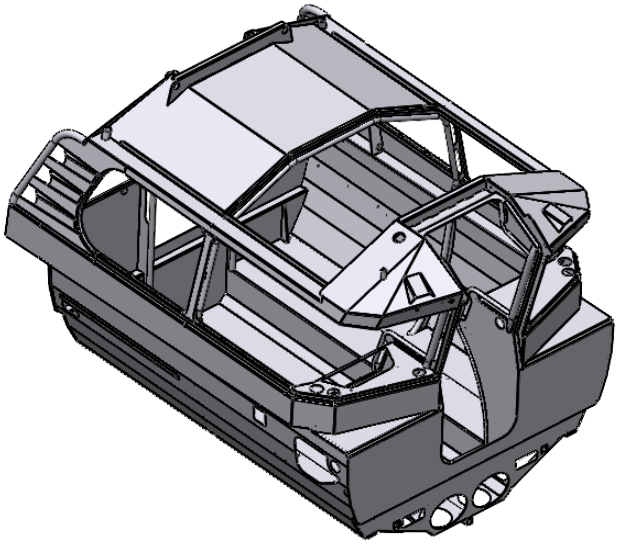

Pos nr	Antal	Titel/Benämning, beteckning
1	1	24 spc aktervägg (3.0)
2	1	24 spc förvägg (3.0)_1
3	1	24 spc aktervägg (3.0)_1
4	1	24 spc cabindurk (3.0) del1
5	1	24 spc förvägg (3.0)
6	1	24 spc cabinsida undre (2.0) del1
10	1	24 spc pulpet STB (3.0) del1
11	2	24 spc rörlist mid 2 (M-4.0)
12	1	Mirror24 spc cabinsida övre (M-3.0) del1
13	1	24 spc cabinsida akter 1 (M-3.0) del1
15	1	24 spc pulpetsida STB (3.0)_1
17	1	24 spc förvägg dörrkarm SB (4.0)
19	2	24 spc rörlist mid 1 (4.0) del2
22	1	24 spc pulpetsida STB (3.0)
23	2	24 spc förvägg dörrkarm BB (4.0) del 2
24	1	24 spc tak akter 2 (3.0) del1
25	1	24 spc tak för 2 (3.0)
27	1	24 spc tak för STB (3.0)
28	1	24 spc tak för 1 (3.0)
29	1	24 spc tak akter 1 (3.0)
30	1	24 spc tak sida (M-3.0)
32	2	24 spc cabinsida övre (M-3.0) del3
33	1	24 spc cabinsida undre 2 (M-3.0)
34	2	24 spc tak sida (M-3.0) del3
35	1	24 spc trapp för (3.0)
37	1	24 spc cabinsida akter 2
38	2	24 spc pulpet BB (3.0) del2
40	1	24 spc pulpet STB (3.0) del2
41	3	24 spc cabindurk balk
42	4	24 spc cabinknä (M-5.0) del3
44	2	24 spc cabinsida akter 1 (M-3.0) del2
45	2	24 spc cabinsida akter 1 (M-3.0) del3
46	2	24 spc cabinsida akter 1 (M-3.0) del4
47	2	24 spc cabinsida undre (2.0) del3
48	2	24 spc cabinsida undre (2.0) del4
49	2	24 spc cabinknä (M-5.0) del1
50	2	24 spc cabinknä (M-5.0) del2
52	2	24 spc aktervägg (3.0) del2
54	1	24 spc tak akter 2 (3.0) del2
55	1	24 spc tak för panellist (M-3.0)
56	2	24 spc tak sida (M-3.0) del2
57	1	Mirror24 spc rörlist akter (M-3.0)
60	1	24 spc rör del 2
63	1	24 spc rör del 3
64	1	24 spc rör del 1
65	1	24 spc cabinsida akter 1 (M-3.0) del5
67	2	Länskåpa
68	1	Part9^24 spc cabin

This document and its contents are the exclusive property of Arronet Smidesteknik AB and must not be copied, reproduced, transmitted or communicated to any other party or used for purposes not expressly permitted by us.

Arronet
Arronet Teknik AB
Varvsvägen 2
742 43 Öregrund
Telefon 0173-465 90
info@arronet.se

Designed by | Date
Drawn by: Martin Bevemyr | Date
Approved by | Date

Weight	Material	Thickness
Kg		t=

Status	Tolerance

Scale	Format	Sheet/Sheet	Rev Part
1:40	A4	2/2	

Title/Description

24SPC Cabin

Drawing no	Rev

SOLIDWORKS Educational Product. For Instructional Use Only.